Flat Bottom Cutting and Boring Guide
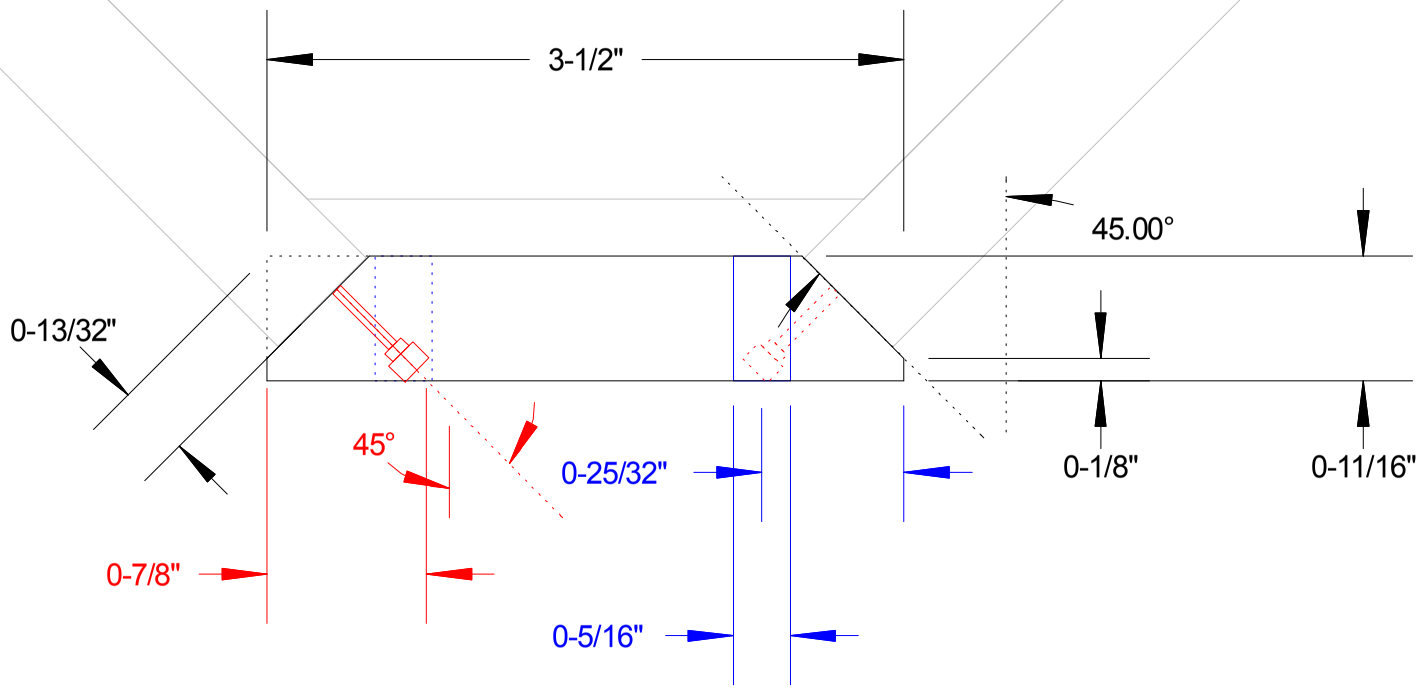
All Rights to this product are reserved by Hurley-Byrd, LLC. This construction plan is to be used strictly by the individual who downloads it for their personal use and the plans will not be copied or shared or used for commercial purposes without the prior written consent of Hurley-Byrd, LLC. © 2012